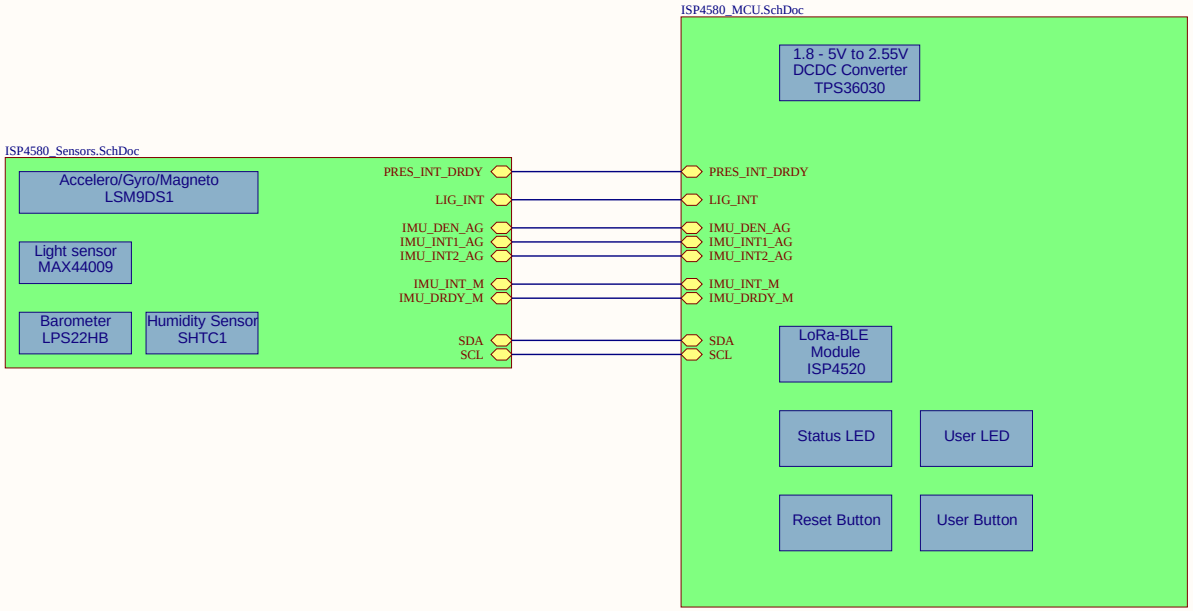

Title	***Block Diagram - ISP4580 LoRa sensors board***		*Insight SiP* *Greenside NCI Bat 7 Ent 2* *400 avenue Roumanille* *06906 SOPHIA ANTIPOLIS* *FRANCE*
Size: A3	Project: ISP4580C.PrjPcb	Revision: R3	
Date: 19/12/2019	Time: 08:15:56	Sheet 1 of 3	
File: ISP4580_Block_Diagram.SchDoc			

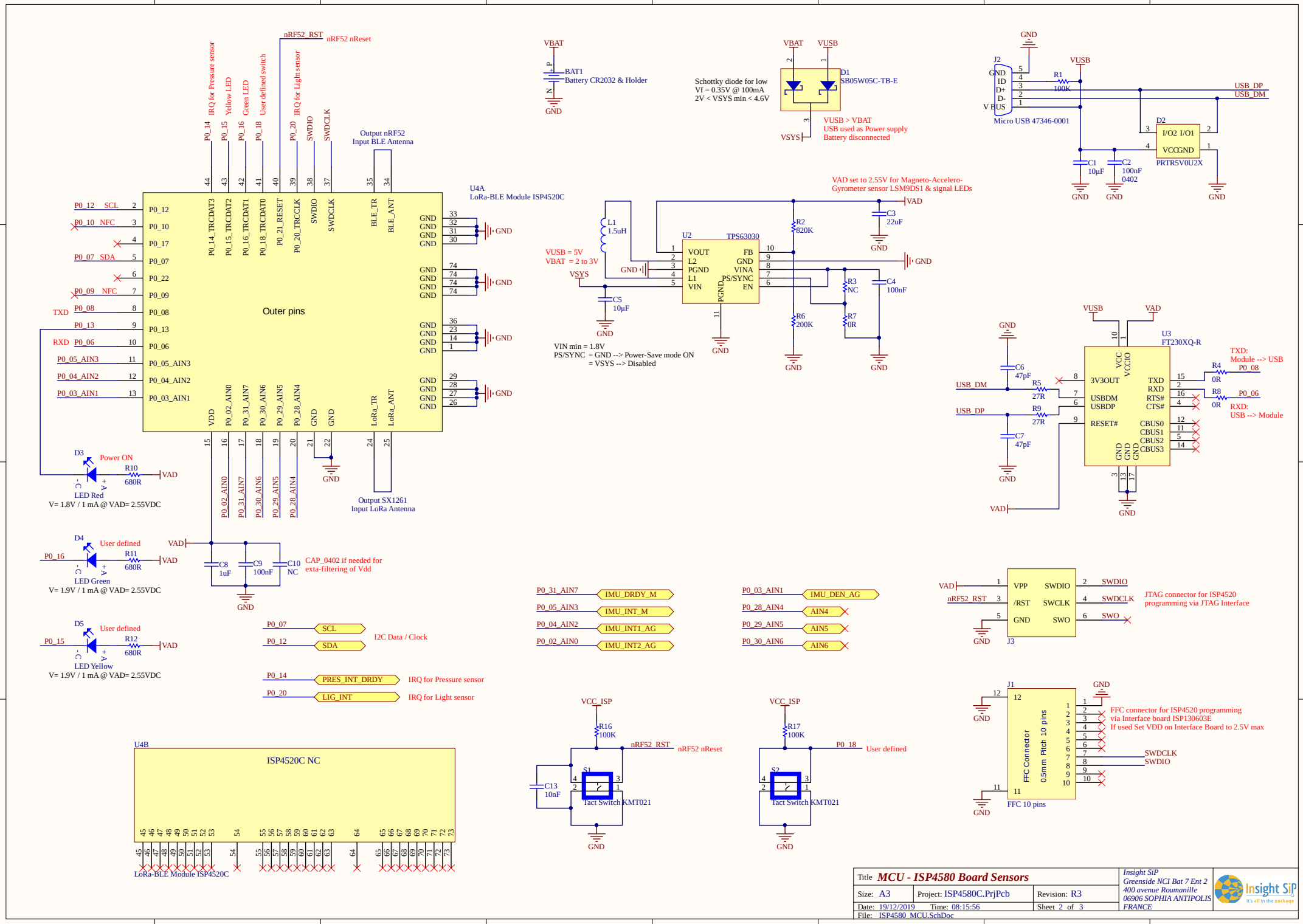
U4A
LoRa-BLE Module ISP4520C
Outer pins
nRF52_RST
nRF52 nReset
IRQ for Pressure sensor
Yellow LED
Green LED
User defined switch
IRQ for Light sensor
SWDIO
SWDCLK
Output nRF52
Input BLE Antenna
Output SX1261
Input LoRa Antenna
P0_12 SCL
P0_10 NFC
P0_07 SDA
P0_09 NFC
TXD P0_08
RXD P0_06
P0_05_AIN3
P0_04_AIN2
P0_03_AIN1
P0_16
P0_15
D3 Power ON
R10 680R
LED Red
V= 1.8V / 1 mA @ VAD= 2.55VDC
D4 User defined
R11 680R
LED Green
V= 1.9V / 1 mA @ VAD= 2.55VDC
D5 User defined
R12 680R
LED Yellow
V= 1.9V / 1 mA @ VAD= 2.55VDC
C8 1uF
C9 100nF
C10 NC
CAP_0402 if needed for exta-filtering of Vdd
P0_07 SCL
P0_12 SDA
I2C Data / Clock
P0_14 PRES_INT_DRDY
IRQ for Pressure sensor
P0_20 LIG_INT
IRQ for Light sensor
U4B
ISP4520C NC
LoRa-BLE Module ISP4520C
VBAT
BAT1
Battery CR2032 & Holder
GND
Schottky diode for low
Vf = 0.35V @ 100mA
2V < VSYS min < 4.6V
D1
SB05W05C-TB-E
VSYS
VUSB > VBAT
USB used as Power supply
Battery disconnected
J2
Micro USB 47346-0001
R1 100K
USB_DP
USB_DM
D2
PRTR5V0U2X
C1 10µF
C2 100nF 0402
VAD set to 2.55V for Magneto-Accelero-Gyrometer sensor LSM9DS1 & signal LEDs
U2
TPS63030
L1 1.5uH
VUSB = 5V
VBAT = 2 to 3V
C5 10µF
VIN min = 1.8V
PS/SYNC = GND --> Power-Save mode ON
= VSYS --> Disabled
R2 820K
R6 200K
R3 NC
R7 0R
C3 22uF
C4 100nF
U3
FT230XQ-R
C6 47pF
C7 47pF
R5 27R
R9 27R
R4 0R
R8 0R
TXD: Module --> USB
P0_08
P0_06
RXD: USB --> Module
P0_31_AIN7 IMU_DRDY_M
P0_05_AIN3 IMU_INT_M
P0_04_AIN2 IMU_INT1_AG
P0_02_AIN0 IMU_INT2_AG
P0_03_AIN1 IMU_DEN_AG
P0_28_AIN4 AIN4
P0_29_AIN5 AIN5
P0_30_AIN6 AIN6
J3
JTAG connector for ISP4520 programming via JTAG Interface
VCC_ISP
R16 100K
R17 100K
S1
S2
Tact Switch KMT021
C13 10nF
P0_18 User defined
J1
FFC Connector
0.5mm Pitch 10 pins
FFC 10 pins
FFC connector for ISP4520 programming via Interface board ISP130603E
If used Set VDD on Interface Board to 2.5V max
SWDCLK
SWDIO
Title MCU - ISP4580 Board Sensors
Size: A3
Project: ISP4580C.PrjPcb
Revision: R3
Date: 19/12/2019
Time: 08:15:56
Sheet 2 of 3
File: ISP4580_MCU.SchDoc
Insight SiP
Greenside NCI Bat 7 Ent 2
400 avenue Roumanille
06906 SOPHIA ANTIPOLIS
FRANCE
Insight SiP
It's all in the package

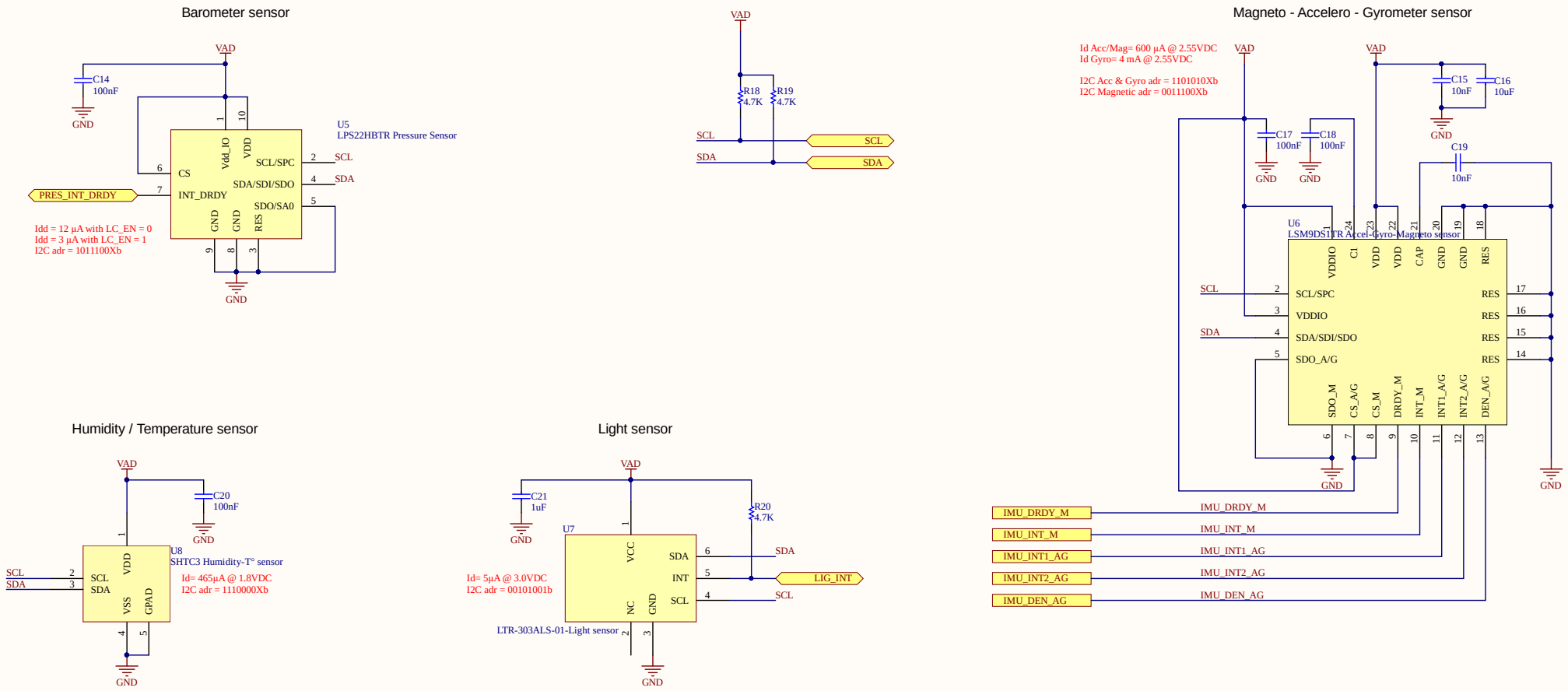

Title	***Sensors - ISP4580 LoRa sensors board***		*Insight SiP* *Greenside NCI Bat 7 Ent 2* *400 avenue Roumanille* *06906 SOPHIA ANTIPOLIS* *FRANCE*
Size: A3	Project: ISP4580C.PrjPcb	Revision: R3	
Date: 19/12/2019	Time: 08:15:57	Sheet 3 of 5	
File: ISP4580_Sensors.SchDoc			

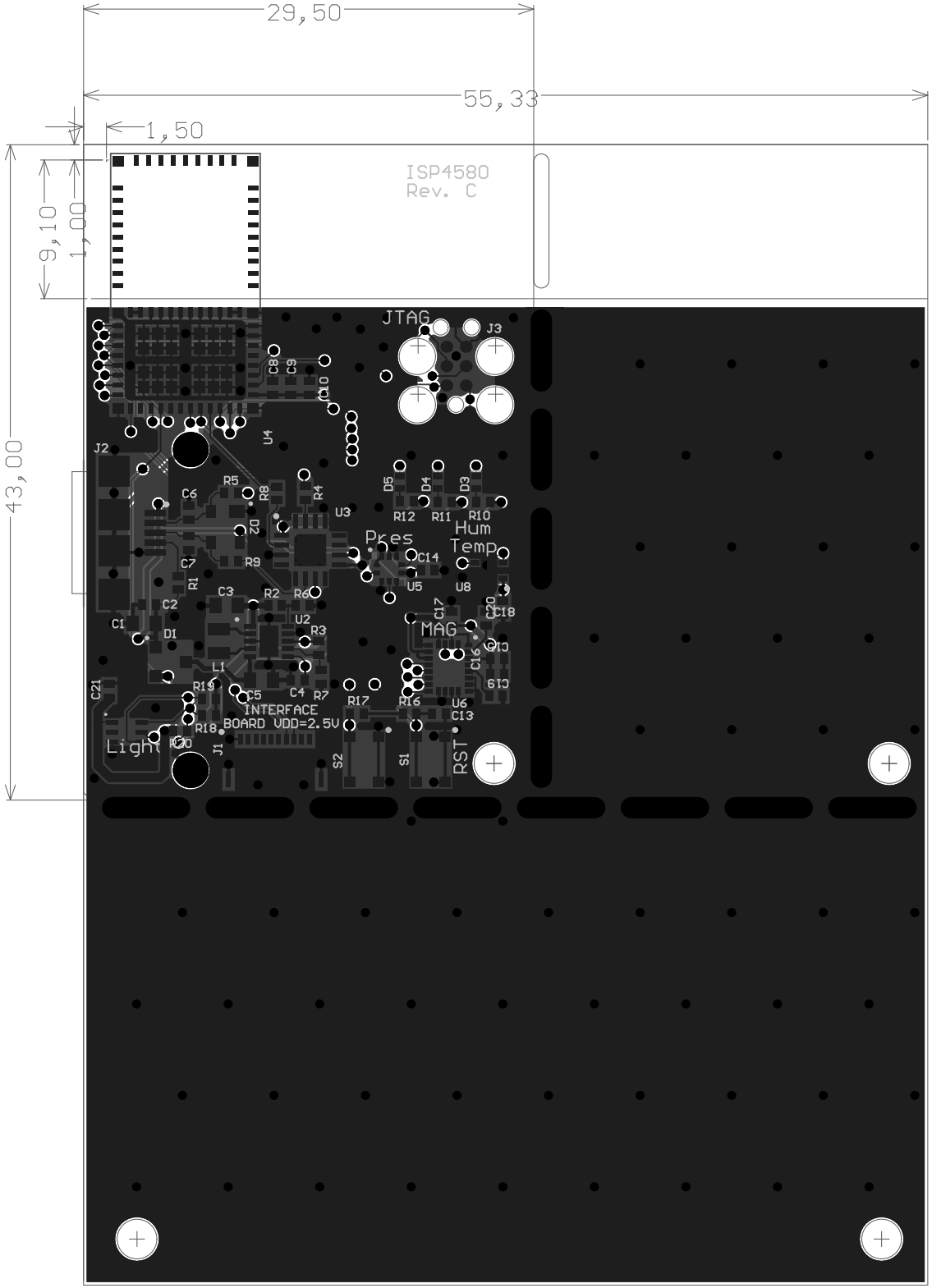
29,50
55,33
1,50
9,10
1,00
43,00
ISP4580
Rev. C
JTAG
J3
J2
U4
C8
C9
C10
C6
R5
R8
R4
U3
D5
D4
D3
R12
R11
R10
Pres
Hum
Temp
C14
U5
U8
C7
R9
R1
C3
R2
R6
C2
C1
D1
U2
R3
C17
C20
C18
MAG
C16
C19
L1
C21
R19
C5
C4
R7
R17
R16
U6
C13
INTERFACE
BOARD VDD=2.5V
R18
C20
J1
S2
S1
Light
RST